Technical data sheet

Vers.: 02

echtermann®
for professionals

Description:

BistroLine pre- rinse
Single-lever mixer tap

Material:

Stainless steel

Item code:

381-102/200-225
381-102/250-225

Technical data:

- Mixer tap: Single-lever mixer
- nominal size 1/2"
- Operating pressure 1 - 6 bar (14.5 - 87 psi)
- For high pressure only
- Ceramic cartridge (mixer), Ceramic headworks (spout)
- Heat insulating handles
- Ergonomic stainless steel hand shower, low-impact thanks to integrated delayed closing mechanism
- Flat spout A=200 / 250mm
- Stainless steel spring
- Stainless steel hook angled downwards for easy fixing and removal of the hand shower
- High-performance stainless steel hose with ball joint for the mixer-tap, connector at the hand shower can be rotated 360°, 600mm long
- Backflow preventer against circulation between hot and cold water, as well as back suction of dirty water
- Installation: table hole Ø30mm
- Flow rate hand spray : 2,4 - 4,8 l/min (1 - 4 bar, 14.5 - 58 psi)
- Flow rate swivel spout 15 - 27 l/min (2 - 4 bar, 14.5 - 58 psi)
- Hot water resistant up to 80°C

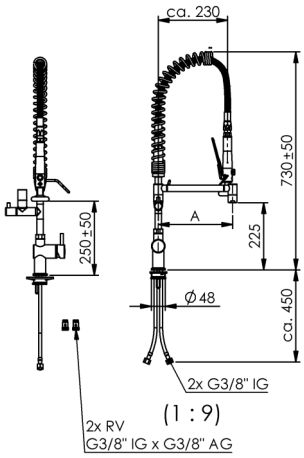

Product description:

- **Robust design** All parts of the dishwashing spray are designed for use in commercial conditions
- **Extended working area** Stainless steel support spring for a large working area
- **Spray** with fan jet for optimum pre-rinsing results
- **Backflow preventer** against circulation between hot and cold water, as well as back-suction of dirty water

Spray

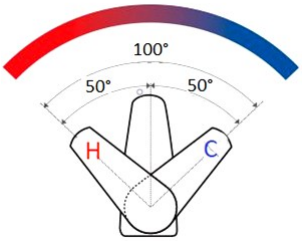

Flow rates:

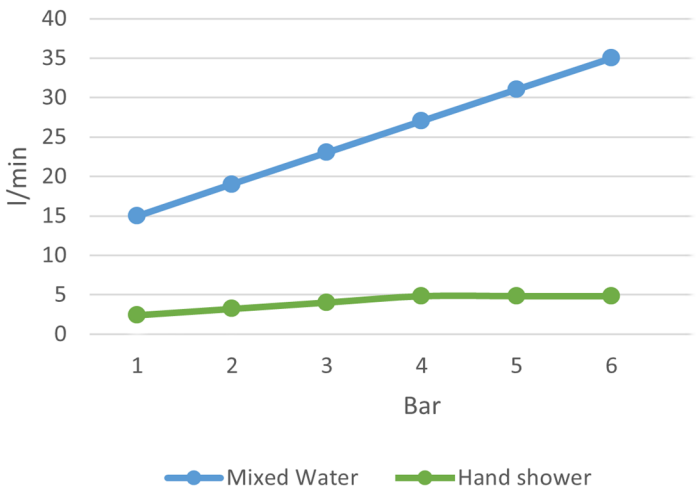

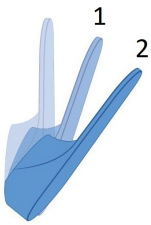

2- stage eco cartridge with water saving function

© by Gebr. Echtermann GmbH & Co.KG

We reserve the right to incorporate technical changes into our products. No guarantee for errors and misprints

Bestimmungsgemäße Verwendung:	The fitting is used in commercial kitchens. The fitting must only be operated by trained specialist staff with a minimum age of 14 years. Assembly and disassembly may only be carried out by certified specialist tradesmen.
Nicht bestimmungsgemäße Verwendung:	The fitting is **not** suitable for connection to low-pressure hot water boilers. The fitting must not be used to clean push-through dishwashers. There is a risk of damage to the hose from excessive pulling.
Gefahrenhinweis:	In case of disassembly or repair the angle valves should be shut off. In order to prevent water damage, the mixer tap has to be closed outside business hours.
Pflegehinweis:	**Do not** use cleaning agents with a high chlorine or acid content. Refrain from using high -pressure cleaning devices, as defined in work sheet VdF 018, for instance. **No types** of scouring agents are to be used for cleaning purposes as they scratch the surface.
Zulassungen:	**All seals meet the requirements for plastics in contact with water and the requirements of DVGW work sheet W 270. All solders are cadmium and lead free.**
Hersteller:	**Gebr. Echtermann GmbH & Co.KG** Bertholdstr.5 D 58644 Iserlohn Tel: +49 (0) 2371 / 9582-0 Fax: +49 (0) 2371 / 52787 Email: contact@echtermann.de

© by Gebr. Echtermann GmbH & Co.KG

We reserve the right to incorporate technical changes into our products. No guarantee for errors and misprints